SB030AR0

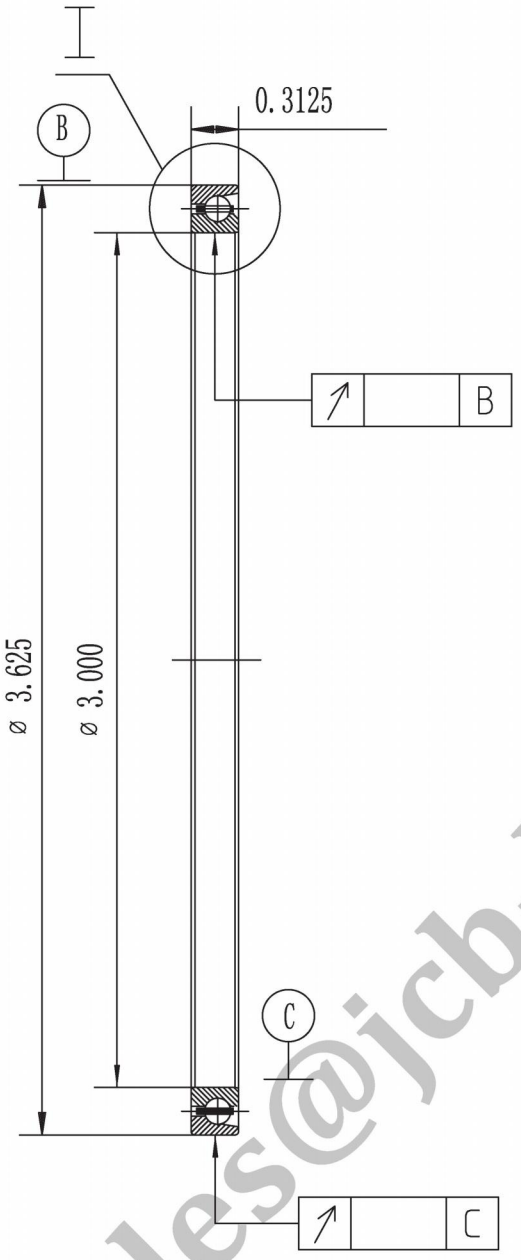

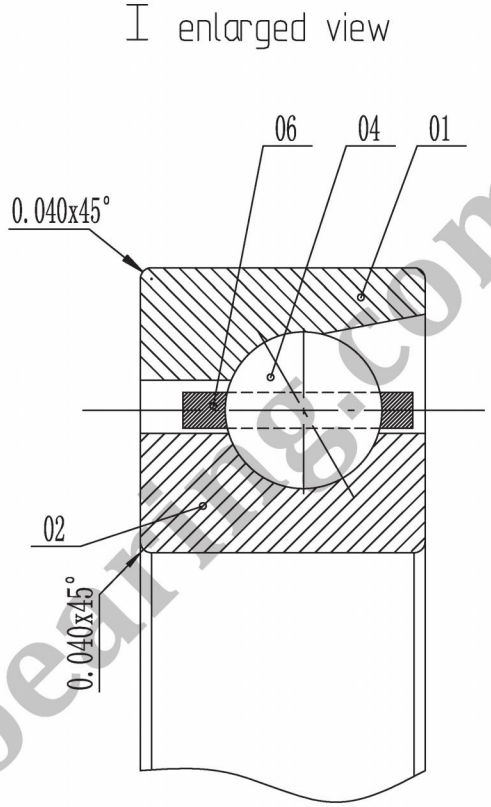

KAYDON THIN SECTION BEARING

Formal drawing of SB030AR0 will be submitted after contact with:
sales@jcb-bearing.com or sales@thinsectionbearings.com

No.	designation	qty	material	unit weight (lbs)	total weight (lbs)	remark
06	cage		nylon			
04	steel ball		AISI 440C stainless steel balls			
02	inner ring	1	AISI 440C stainless steel balls			
01	outer ring	1	AISI 440C stainless steel balls			

Luoyang JCB Bearing Technology Co., Ltd
Contact information
Company Address : No.285 Fenghua road, Luoyang, Henan,China.
Postal code : 471000
Phone : 0086-379-68611678 Fax : 0086-379-68611679
E-mail: sales@jcb-bearing.com
Reserved E-mail: sales@thinsectionbearings.com
Website: http://www.jcb-bearing.com
https://www.thinsectionbearings.com

SB030AR0

			weight(lbs)	
			0.22	——
total page 1			page 1	

Luoyang JCB Bearing Technology Co., Ltd

Email:sales@jcb-bearing.com